Model Name: R11SF / R11SL /R11SR
Product Name: PCIe x1 to x1 Extender
Ver 2.1

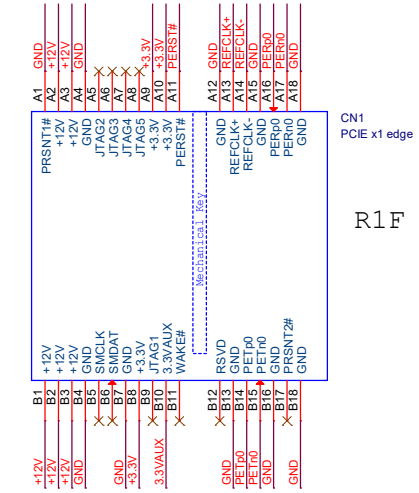

R1F / R1L / R1R V2.1

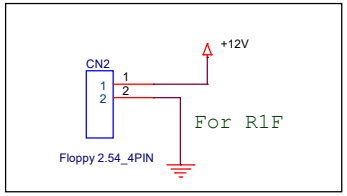

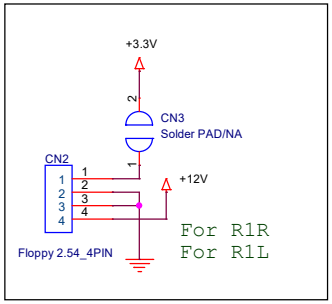

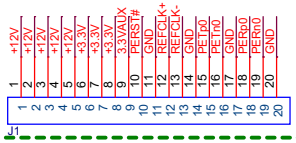

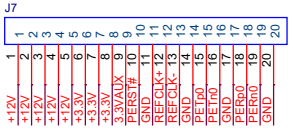

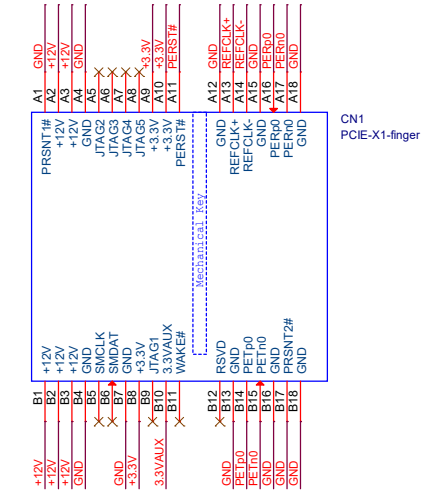

R1S V3.1

Rivision History

Date	Version	Description
20160803	1.0	First Release
20190726	2.1	Add 3.3VAUX Support 12V/6.25A (75W) power consumption